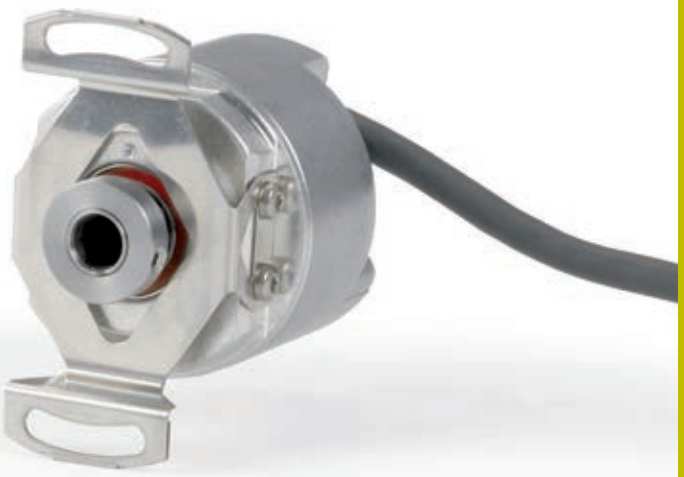

Special Product
— only on request —

Product Information

ERN 1085

Incremental Rotary
Encoder with Z1 Track

02/2018

ERN 1085

- **Rotary encoder with mounted stator coupling**
- **Compact dimensions**
- **Blind hollow shaft Ø 6 mm**
- **Z1 track for sine commutation**

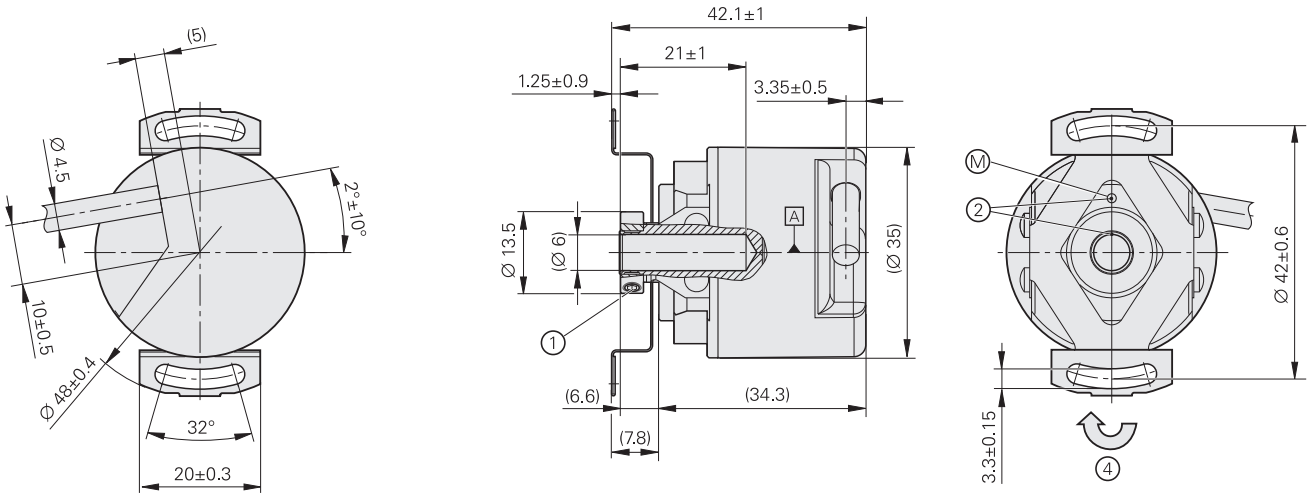

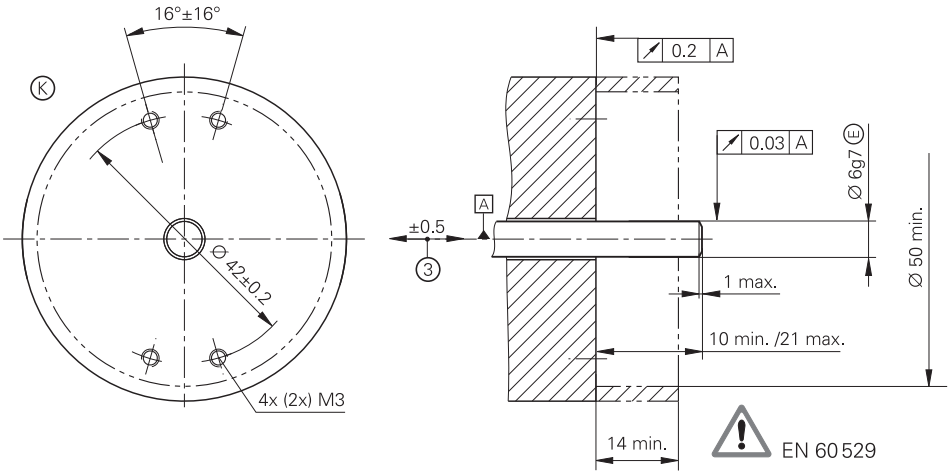

mm

Tolerancing ISO 8015
ISO 2768 - m H
< 6 mm: ±0.2 mm

A = Bearing of mating shaft
K = Required mating dimensions
M = Measuring point for operating temperature
1 = 2 screws in clamping ring. Tightening torque 0.6±0.1 Nm, width across flats 1.5
2 = Reference mark position ± 20°
3 = Compensation of mounting tolerances and thermal expansion, no dynamic motion permitted
4 = Direction of shaft rotation for output signals as per the interface description

	ERN 1085
Incremental signals	∿ 1 V_{PP} [1]
Line count*/ System accuracy	512/± 60″ 2048/± 40″
Reference mark	One
Cutoff frequency –3 dB	*512 lines:* ≥ 100 kHz *2048 lines:* ≥ 350 kHz
Absolute position values	∿ 1 V_{PP} [1]
Position values/revolution	Z1 track for sine commutation: One sine and one cosine signal per revolution
Voltage supply	5 V DC ± 0.5 V
Current consumption without load	≤ 120 mA
Electrical connection	Cable 1 m without connecting element
Cable length	≤ 150 m
Shaft	Blind hollow shaft ∅ 6 mm
Mechanically permissible speed *n*	12 000 rpm
Starting torque	≤ 0.001 Nm (at 20 °C)
Moment of inertia of rotor	≈ $0.5 \cdot 10^{-6}$ kgm^2
Permissible axial motion of measured shaft	± 0.5 mm
Vibration 55 Hz to 2000 Hz **Shock** 6 ms	≤ 200 m/s^2 (EN 60 068-2-6) ≤ 1000 m/s^2 (EN 60 068-2-27)
Max. operating temperature	100 °C
Min. operating temperature	*Fixed cable:* –30 °C *For frequent flexing:* –10 °C
Protection EN 60 529	IP 64
Mass	≈ 0.1 kg

* Please select when ordering
[1] Limited tolerances
Signal amplitude: 0.80 V_{PP} to 1.2 V_{PP}

Assembly

The **ERN 1085** rotary encoder features an integral bearing and mounted stator coupling. The stator coupling compensates radial runout and alignment errors without significantly reducing the accuracy. The encoder shaft is directly connected with the shaft to be measured. During angular acceleration of the shaft, the stator coupling must absorb only that torque resulting from friction in the bearing.

Mounting
The rotary encoder is slid by its hollow shaft onto the measured shaft and fastened by two screws.

Dynamic applications require the highest possible natural frequencies f_N of the system. These are achieved through a stator coupling by four screws or with special washers (see *Mounting accessories)*.

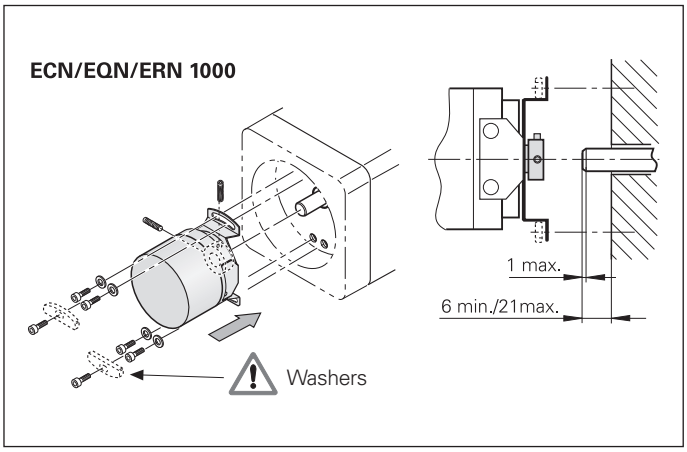

Mounting accessories

Washer
For increasing the natural frequency f_N when fastening with only two screws
ID 334653-01

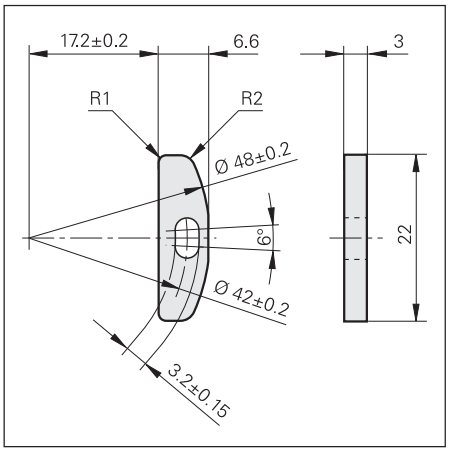

Interfaces

Commutation signals for sine commutation

The **commutation signals C and D** are taken from the Z1 track, and are equal to one sine or cosine period per revolution. They have a signal amplitude of typically 1 V_{PP} against 1 kΩ. The input circuit of the subsequent electronics corresponds to the ∿ 1 V_{PP} interface. However, the required terminating resistance Z_0 is 1 kΩ instead of 120 Ω.

Interface	Sinusoidal voltage signals ∿ 1 V_{PP}
Commutation signals	**Two nearly sinusoidal signals C and D** For the signal level, see *Incremental signals* ∿ *1 V_{PP}*
Incremental signals	See *Incremental signals* ∿ *1 V_{PP}*
Connecting cables Cable length Propagation time	Shielded HEIDENHAIN cable PUR [4(2 x 0.14 mm^2) + 4(2 x 0.14 mm^2) + (4 x 0.5 mm^2)] Max. 150 m 6 ns/m

Electronic commutation with Z1 track

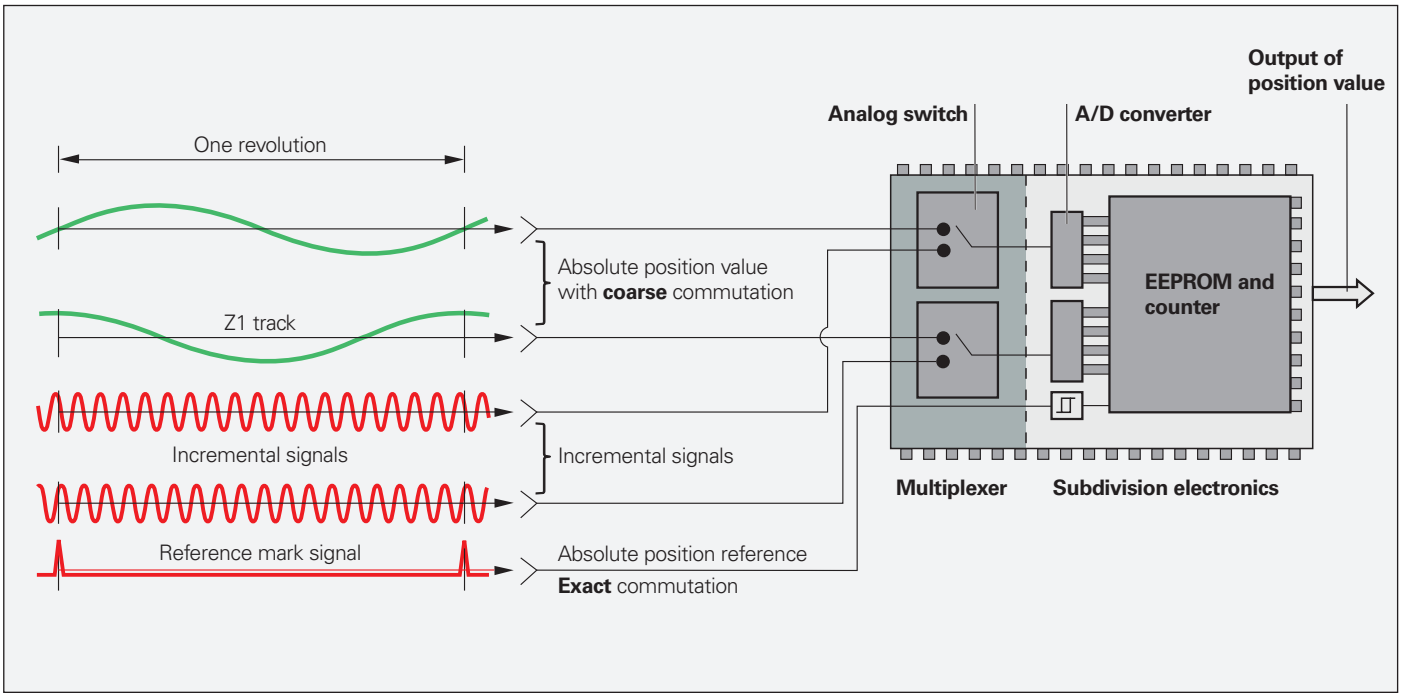

Pin layout

17-pin coupling
M23

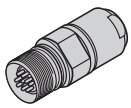

17-pin connector
M23

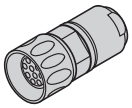

	Voltage supply					Incremental signals					
	7	**1**	**10**	**4**	**11**	**15**	**16**	**12**	**13**	**3**	**2**
	U_P	**Sensor** U_P	**0 V**	**Sensor** 0 V	**Internal shield**	**A+**	**A–**	**B+**	**B–**	**R+**	**R–**
	Brown/ Green	Blue	White/ Green	White	/	Green/ Black	Yellow/ Black	Blue/ Black	Red/ Black	Red	Black

	Other signals			
	14	**17**	**9**	**8**
	C+	**C–**	**D+**	**D–**
	Gray	Pink	Yellow	Violet

Shield on housing
U_P = Power supply
Sensor: The sensor line is connected internally with the corresponding power line.
Vacant pins or wires must not be used.

Cables and connecting elements

		17-pin M23
PUR connecting cable Ø 8 mm **17-pin:** [(4 x 0.14 mm^2) + 4(2 x 0.14 mm^2) + (4 x 0.5 mm^2)]		
Complete with M23 connector (female) and M23 coupling (male)		323897-xx
Complete with M23 connector (female) and D-sub connector (female) for IK 220		332115-xx
Complete with M23 connector (female) and D-sub connector (male) for IK 115/IK 215		324544-xx
With one M23 connector (female)		309778-xx
Cable only, Ø 8 mm		816317-01

Mating element on connecting cable to connecting element on encoder cable	**M23 connector (female)** for cable 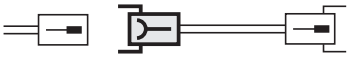	Ø 8 mm	291697-26
Connector on connecting cable for connecting to the subsequent electronics	**M23 connector (male)** for cable 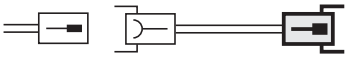	Ø 8 mm Ø 6 mm	291697-27
Coupling on connecting cable	**M23 coupling (male)** for cable 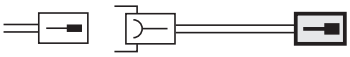	Ø 4.5 mm Ø 6 mm Ø 8 mm	291698-25 291698-26 291698-27
Mounted coupling M23	**With flange (female)** 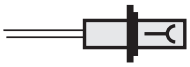	Ø 6 mm Ø 8 mm	291698-35
	With flange (male) 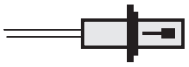	Ø 6 mm Ø 8 mm	291698-41 291698-29
	With central fastening (male) 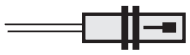	Ø 6 mm to 10 mm	741045-01

HEIDENHAIN

DR. JOHANNES HEIDENHAIN GmbH
Dr.-Johannes-Heidenhain-Straße 5
83301 Traunreut, Germany
☏ +49 8669 31-0
FAX +49 8669 32-5061
E-mail: info@heidenhain.de

www.heidenhain.de

This Product Information supersedes all previous editions, which thereby become invalid. The basis for ordering from HEIDENHAIN is always the Product Information document edition valid when the order is made.

For more information:

Comply with the requirements described in the following documents to ensure the correct operation of the encoder:

- Brochure: *Encoders for Servo Drives* 208922-xx
- Brochure: *Interfaces of HEIDENHAIN Encoders* 1078628-xx
- Brochure: *Cables and Connectors* 1206103-xx

For brochures and product information documents, visit **www.heidenhain.de.**

358785 · 03 · A · 02 · 02/2018 · PDF